# Closed Chocks ASTM A27-70-36 Cast Steel

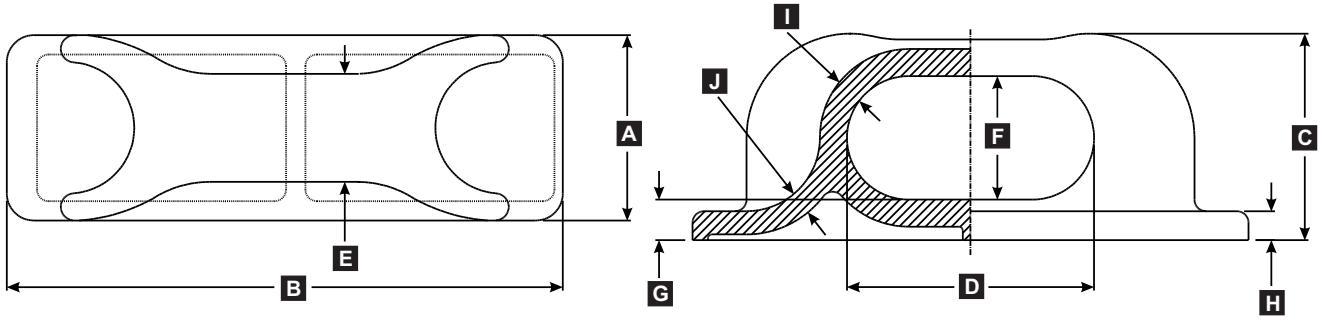


| MODEL | DESCRIPTION | PART # | DIMENSIONS IN INCHES (MM) | | | | | | | | | | LBS |
|---|---|---|---|---|---|---|---|---|---|---|---|---|---|
| | | | A | B | C | D | E | F | G | H | I | J | (KGS) |
| UMC-480 | CLOSED CHOCK, 9” | 04610-301A | 9” (229) | 27.75” (705) | 10.13” (257) | 12” (305) | 5.25” (133) | 6” (152) | 2.06” (52) | 1.5” (38) | 1.375” (35) | 1.125” (29) | 176 (80) |
| UMC-490 | CLOSED CHOCK, 12” | 06240-301A | 12” (305) | 36” (914) | 13.38” (340) | 16” (406) | 7” (178) | 8” (203) | 2.63” (67) | 1.88” (48) | 1.75” (44) | 1.5” (38) | 455 (206) |
| UMC-14 | CLOSED CHOCK, 14” | 06241-301A | 14” (356) | 42” (1066) | 15.63” (397) | 18.75” (476) | 8.17” (208) | 9.38” (239) | 3.06” (78) | 2.19” (56) | 2” (51) | 1.75” (44) | 725 (329) |